Electric Ball Valve Actuator

ZBA24WP
ZBA230WP

Application

This product is suitable for the proportional adjustment of 2-way and 3-way valves in water system of underfloor heating and central air conditioning.

Features

- ※ Low noise, long life
- ※ Simple operation and easy installation
- ※ Manual adjusting, and can realize power-off control
- ※ Accurate detection of valve opening position
- ※ The power source is provided by a brushless motor
- ※ Auto-rotating LCD screen

Main Specifications

Function: Temperature control
Power Supply: 230V AC;
24V AC/DC
Power: 5W for running/1W for maintaining
Frequency: 50/60Hz
Running Time: 90s/90°(adjustable)
Torque: 10N.m
Protection Class: IP54
Cable: 2*0.5mm, black PVC jacket

Dimensions (mm)

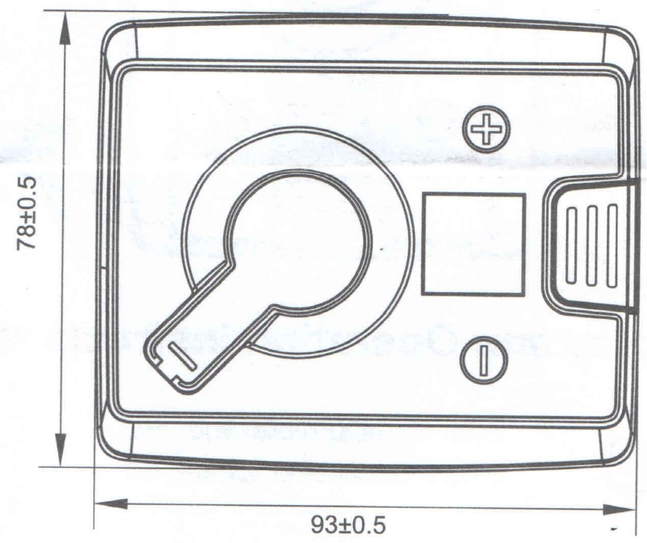

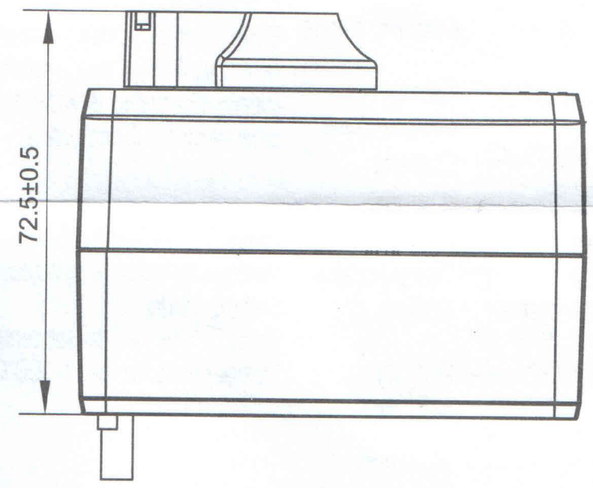

Wiring Diagram

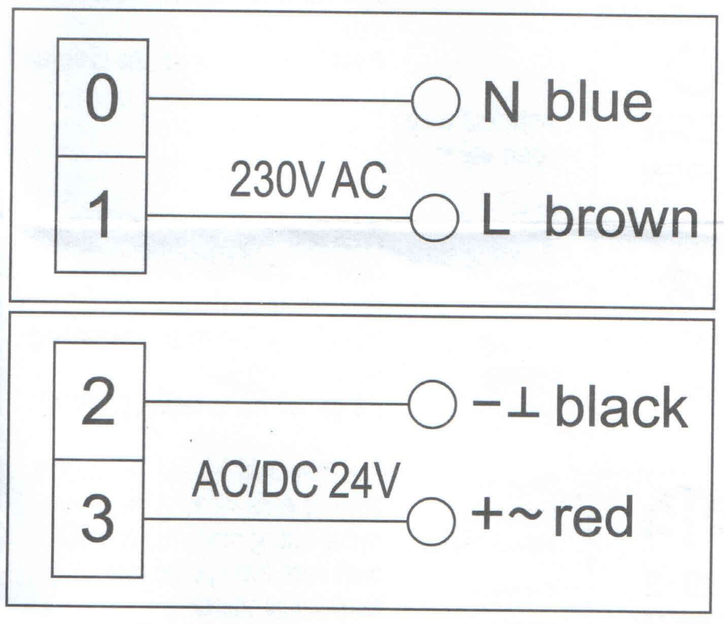

Description

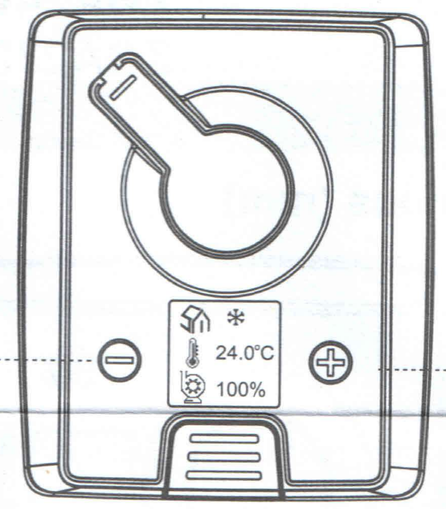

Data Decrease

Data Increase

Display and Operation Instruction

Enter learning mode and reset automatically after turning on.

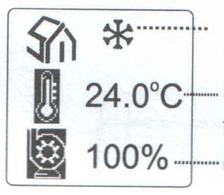

Cooling mode

Current temperature

Current opening

Enter normal working mode after resetting. Pump image rotating means the pump is working, and stop working if not rotate.

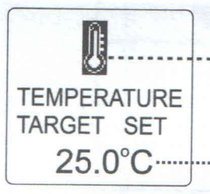

Temperature setting

Factory setting

Press "-", "+" or hold both buttons to enter temperature setting mode.
Press "-" or "+" to set temperature.
Temperature range: 1-100°C.

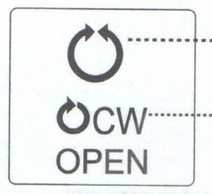

Rotating direction

Clockwise open valve

Anticlockwise open valve

Press and hold "-" and "+" buttons again to enter rotation direction setting mode.
Press "-" or "+" to set the direction.

Running time setting

Factory setting

Press and hold "-" and "+" buttons again to enter full stroke running time setting mode.
Press "-" or "+" to set the running time.
Range: 60-150s; factory set at 90s.

Working frequency period setting

Factory setting

Press and hold "-" and "+" buttons again to enter working frequency period setting mode. Actuator will work once every period with temperature changing.
Press "-" or "+" to set the frequency.
Range: 5–999s; factory set at 20s.

Display and Operation Instruction

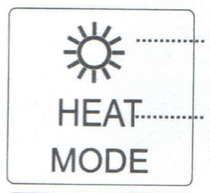

Heating mode

Factory setting

Press and hold "-" and "+" buttons again to enter heat/cool setting mode.
Press "-" or "+" to set the mode.

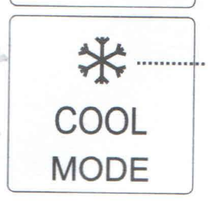

Cooling mode

ON/OFF mode

Press and hold "-" and "+" buttons again to enter ON/OFF mode.
Press "-" or "+" to set the mode.

ON/OFF mode

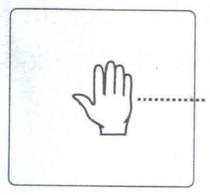

Manual mode

Press the manual button to enter manual mode.
Actuator will reset automatically when quitting manual mode.

Manual Adjusting Mode

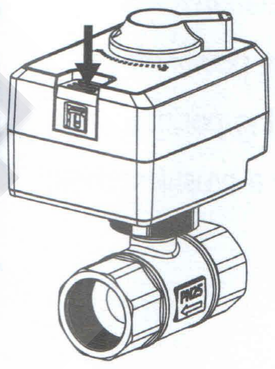

When the actuator is powered off or needs to be adjusted manually, the operator can press the manual adjustment button and turn the knob to adjust the valve opening. Exit the manual mode, and the actuator performs a self-reset

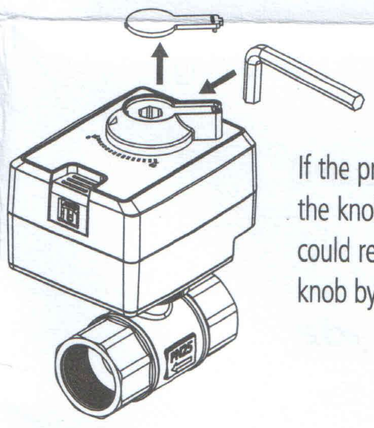

If the pressure differential is too big and the knob is difficult to rotate, operator could remove the knob cap and rotate the knob by a 10mm hexagon wrench.

20240725A-18-949