RHEKEN

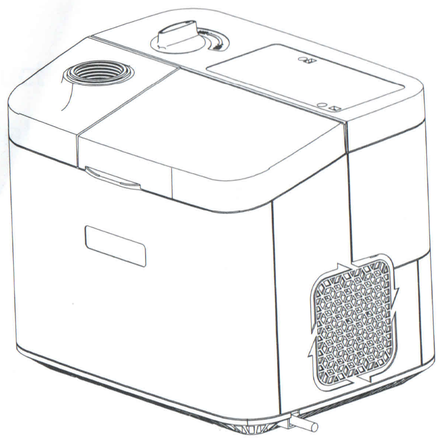

USE INSTALLATION INSTRUCTION FOR PERMANENT MAGNET
VARIABLE FREQUENCY STAINLESS STEEL SELF-PRIMING PUMP

INDEX

1.Product Overview 1
2.Model Description 1
3.Product Structure 3
4.Safety Precautions 4
5.Operating Instructions 5
6.Pipelines Installation..... 7
7.Electrical Connection 7
8.Start-up and Maintenance 7
9.Common Faults and Solutions 8

I. Product Overview

The W Series Permanent Magnet Variable Frequency Booster Pump is a compact water supply system suitable for household pipeline pressure boosting. It is also applicable for water delivery in gardens, hotels, and high-rise buildings.

PH: 6-8.5
Ambient Temperature: 0-50°C
Liquid Temperature:: 0-90°C
Relative Humidity: Max.85%(RH)

II. Model Description

W-400

Power (W)

Perrmanent Magnet Variable Frequency Stainless Steel Pump

Model	Voltage (V/Hz)	Rated Flow (m^3/h)	Rated Head (m)	Max Flow (m^3/h)	Max Head (m)	Input Power (W)	Suction (m)
W400	220/50-60	1	20	2.5	33	100~400	8
W600		1.5	25	2.5	38	100~600	
W800		2	30	3.5	45	100~800	
W1500		4	40	6	60	100~1500	

⚠ Warning

Please use the product strictly in accordance with the User Manual.

1. Before powering on, carefully check the insulation resistance to prevent electric shock.
2. The pump must be properly grounded and equipped with a leakage protection switch.
3. After powering on, do not touch the pump. Avoid washing, swimming, or allowing livestock to come into contact with water nearby to prevent electric shock.
4. In the event of any malfunction, the power supply must be turned off before servicing the pump.
5. The operating liquid temperature is: 0 - 90° C.
6. When installed indoors, ensure that a drainage system is set up near the pump to prevent water accumulation due to pump failure, which could lead to property damage.

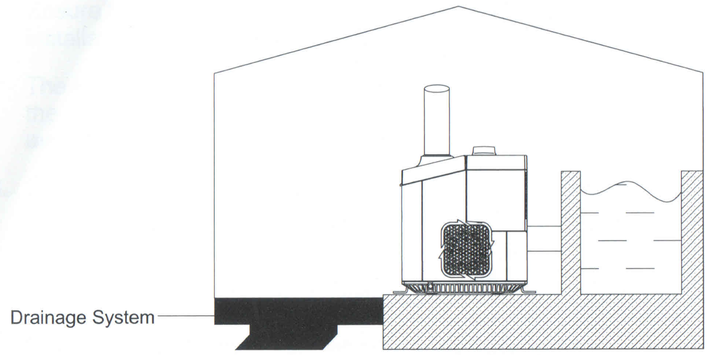

III. Product Structure

Note: Do not disassemble the unit without the presence of qualified personnel or professional guidance.

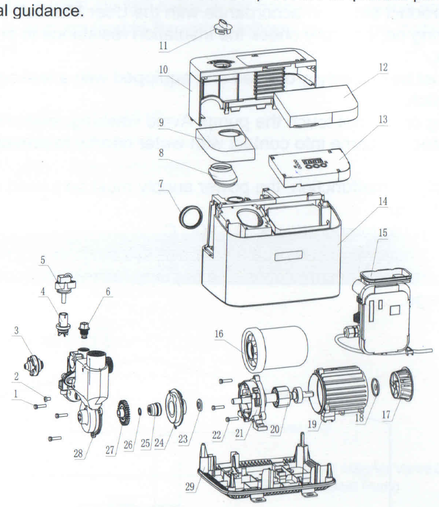

1	Screw	7	Inlet Rubber Sleeve	13	Display Panel	19	Motor	25	Mechanical Seal
2	Drain Nut	8	Outlet Rubber Sleeve	14	Housing	20	Rotor	26	Retaining Ring
3	Pressure Sensor	9	Front Cover	15	Inverter	21	Bracket	27	Impeller
4	Check Valve	10	Rear Cover	16	Pressure Tank	22	Screw	28	Pump Body
5	Flow Sensor	11	Knob	17	Fan	23	Front Water Seal Ring	29	Base
6	Water Injection Nut	12	Flip Cover	18	Rear Seal Ring	24	Pump Cover	30	/

IV. Safety Precautions

1. Always disconnect the power before installation and maintenance. The electric pump must be properly grounded. To prevent electric shock, ensure that a leakage protection switch is installed.

2. Only water should be used in the pump. Using flammable or explosive liquids can lead to fire hazards.

3. Do not touch the pump while it is operating. Avoid washing, swimming, or allowing livestock in the vicinity of the working area to prevent accidents.

4. Avoid running the pump in a dry state, as this will shorten its lifespan. The motor may overheat and fail. Do not expose the pump to direct sunlight while in operation, as this can affect its longevity.

5.1. Ensure that the pump cannot be accidentally powered on during installation and maintenance; always disconnect the power first.

5.2. The liquids being pumped may be hot. Always empty the pump and the connected pipes before moving or disassembling the pump to avoid burns.

5.3. Supply power according to the voltage indicated on the nameplate. If the pump will not be used for an extended period, store it in a cool, dry, and ventilated place at room temperature.

6. When installed indoors, ensure that a drainage system is in place near the pump to prevent water accumulation that could lead to property damage.

V. Operating Instructions

Display Panel Button Names and Functions

1.Button and Fault Indicator Description

Icon	Name	Description
	Start/Stop Button	This controls the start/stop switch of the controller. After the pump is installed and powered on, press the "Start/Stop Key" to start the pump; press it again to stop the pump.
	Up Button	Used for setting parameters; the "Up Button " increases the value.
	Down Button	Used for setting parameters; the "Down Button " decreases the value.
8.8.8.8	Status Display Area	Displays parameters such as pressure while the pump is operating.
	Power Indicator Light	The light is off when the power is off. It flashes during constant pressure shutdown and remains on when the pump is running.
	Flow Switch Indicator Light	Flashes when there is a flow switch fault. The light is on when water is being used and off when there is no water.
	Leak Protection	The light flashes when there is a leak in the water inlet line or the pump.
	Low Water Protection	The light turns on when the pump is low on water and triggers a shutdown for protection.

2.Routine Function Button Operations

Operation	Method	Notes
Power On/Standby	Short press the to power on (the power indicator light will illuminate). Short press again to enter standby (the power indicator light will turn off).	1. Shutdown: Indicator light off. 2. Standby: Indicator light flashes. 3. Running: Indicator light remains on.
Target Pressure	Short press the or to adjust the corresponding parameter. After 5 seconds of inactivity, it will exit pressure setting. The pump will start operating at the new target pressure.	
Restore Factory Settings	Press and hold both the and for 15 seconds until "UXX" (software version number) is displayed to restore factory settings.	All parameters will be reset, and the display will show the version number.

3.Common Fault Codes and Troubleshooting

For faults that are not displayed, the digital display will not show fault codes, and the corresponding alarm indicator light will illuminate.

Fault Code	Corresponding Fault	Troubleshooting
E-01	Communication fault between the panel and mainboard	Check if the panel cable is connected properly; try unplugging and re-plugging. If the issue persists, either the panel or mainboard may be faulty.
E-14	Low voltage warning / protection(Indicator light on)	Input voltage is below 180VAC, triggering shutdown protection.
E-15	High voltage warning / protection (Indicator light on)	Input voltage is below 260VAC, triggering shutdown protection.
E-10	Stalling	Check if the motor is jammed.
E -11	Controller overcurrent	1. Check if the motor is short-circuited or misconnected.
E-18	Phase loss(Indicator light on)	2. Check for damage to the driver.
E -19	Stalling	Check if the motor wires are loose or improperly connected.
E-12	IPM temperature sensor fault	Motor load is too heavy.
E-20	Driver board overheat fault	IPM temperature protection circuit is disconnected.
E-13	Lack of water(Indicator light on)	IPM detects excessively high temperature, triggering shutdown protection.
A- 16	Leakage	Check if water is actually lacking. If water is present, check the water flow switch if applicable. For models without a water flow switch, adjust the low water pressure setting in the factory menu to below the current pressure.
A-17	Pressure sensor fault	Pressure drops slowly; the pump restarts more than 15 times. Check for leaks in the piping or issues with the check valve. This does not affect water usage, it is only a warning.
E-23	Water temperature sensor fault	Check if the pressure sensor connection is loose; inspect the interface and re-plug. If the issue persists, replace the pressure sensor.
A-21	High water temperature protection	Water temperature sensor circuit is disconnected.
A-22	Low water temperature protection	Water temperature exceeds protection temperature, causing the pump to shut down. The pump automatically resumes when the water temperature drops to a safe level.

VI. Pipeline Installation

Installation Precautions for Inlet Pipeline:

1. When installing the electric pump, do not use overly soft rubber hoses for the inlet pipeline to avoid collapsing.
2. All connection points in the inlet pipeline must be sealed to minimize elbows; otherwise, it may lead to insufficient water intake or pressure.
3. The diameter of the inlet pipeline should be at least comparable to the inlet size to prevent excessive hydraulic loss that could affect water discharge performance.
4. Ensure that the electric pump is not subjected to pipeline pressure during installation.
5. To prevent solid particles from entering the electric pump, a filter must be installed in the inlet pipeline.

VII. Electrical Connection

Note:1. This task must be performed by a qualified electrician. Do not disassemble the pump without the guidance of a professional.

2. The electric pump must be properly grounded to prevent electric leakage and should be equipped with a residual current protection switch.

VIII. Start-up and Maintenance

Do not start the pump before the pump chamber is filled with water. Do not touch the electric pump unless the power has been disconnected for at least 5 minutes. Do not remove the pump body unless the water in the pump chamber has been fully drained

1. If the pump is started and does not discharge water after 6 minutes of filling, shut down the pump. Please refill with water or check for leaks in the inlet pipeline or whether the installation height meets the pump's suction lift requirements.
2. In summer or at high ambient temperatures, ensure proper ventilation to prevent condensation in the electrical components, which could lead to electrical failure.
3. If the motor becomes excessively hot or shows abnormal behavior, immediately disconnect the power and refer to the following table to check for faults.

IX. Common Faults and Solutions

Please turn off the power before servicing the pump.

Fault	Cause	Solution
Motor runs but no water	Pump rotation direction is incorrect	Reverse the connections of the motor (for three-phase motors)
	Pump is not filled with water	Refill the pump with water
	Impeller is damaged	Replace the impeller (send to repair shop)
	Water level is below the bottom valve	Adjust the inlet pipe to ensure the bottom valve is submerged in water
	Air leak in the suction pipe	Check the sealing of each joint in the suction line
	Water level is too low, below the pump's suction lift limit	Adjust the pump installation height or select a suitable pump
	Water accumulation in the pump chamber causing ice	Wait for ice to melt before starting
Low pressure	Incorrect pump selection	Select a suitable pump
	Suction line is too long, too many bends, or wrong diameter	Use the specified pipe diameter and design a shorter suction line
	Foreign object blocking inlet pipe, filter, or pump chamber	Clean the pipe, bottom valve, or pump chamber to remove debris
	Low voltage to the motor, long wire	Check the terminal voltage and increase wire gauge
Vibration of the pump	Pump not fixed to the base	Tighten the anchor bolts
	Foreign objects in the pipe or pump chamber	Inspect and clean the pipe and pump
	Unstable base	Install a more stable base
Motor intermittently works or stator winding burned out	Motor overloaded for too long	Install a valve at the outlet to reduce flow
	Impeller stuck or prolonged overload	Clear debris from the pump chamber and operate near rated flow
	Incorrect grounding or damaged cable, pump struck by lightning	Identify the cause and replace the winding wire
Leakage at the bracket	Worn mechanical seal due to debris	Clean or replace the mechanical seal
Frequent start-stop of pump	a. Minor leak in the pipeline b. Air tank has no pressure or is damaged	a. Check for minor leaks in the pipeline b. Replace the pressure tank and re-inflate
Pump cannot operate	Set pressure is lower than pipeline pressure	Adjust the set pressure value
PBC board fault	PBC board damaged	Open the cover and tighten the signal wires, repair or replace the PBC board